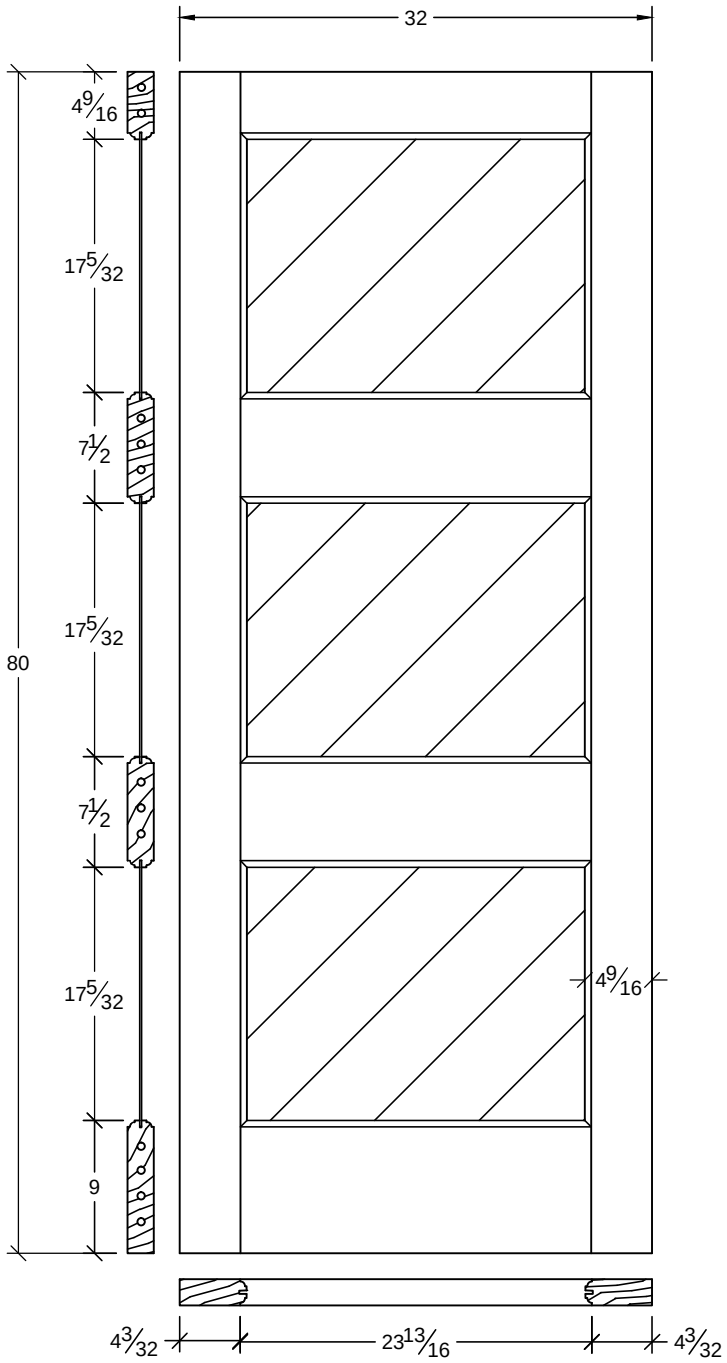

This drawing contains information which is the property of Woodgrain Millwork, Inc. This drawing is received on confinence and contents may not be disclosed without the prior written consent of Woodgrain Millwork, Inc.

603W

Draw #:	Ovolo 603W_32_80
Date:	09 - 30 - 14
Drawn By:	T Doughty

woodgrain doors