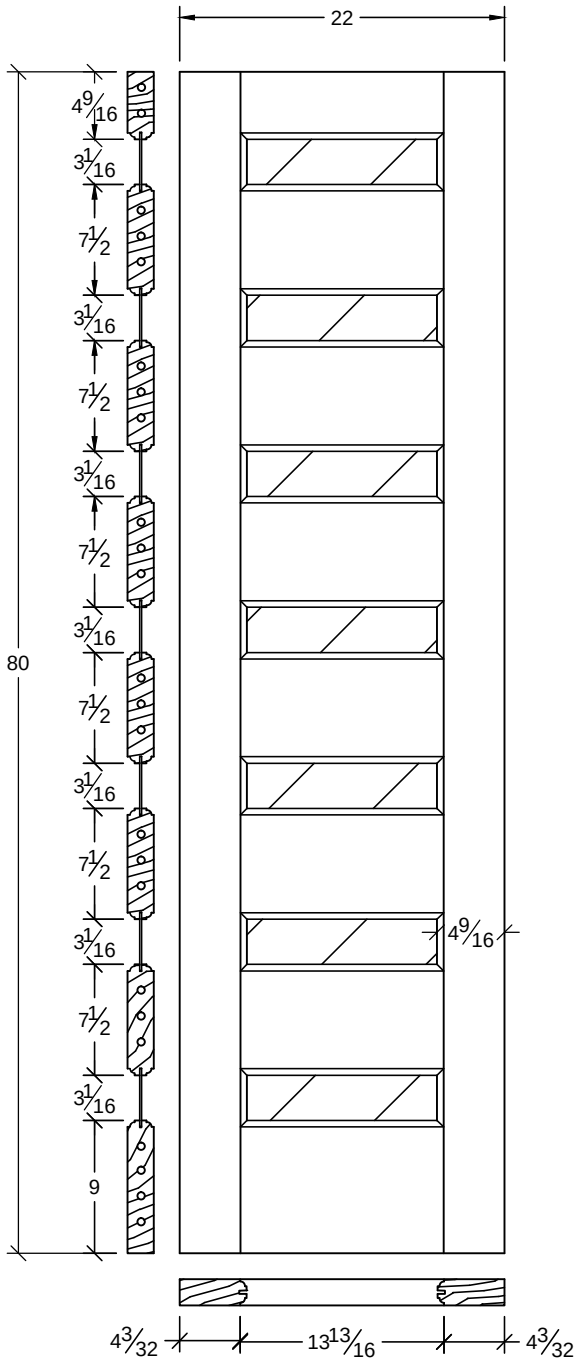


This drawing contains information which is the property of Woodgrain Millwork, Inc. This drawing is received on confinence and contents may not be disclosed without the prior written consent of Woodgrain Millwork, Inc.

# 607W

| | |
|---|---|
| Draw #: | Ovolo 607W_22_80 |
| Date: | 07 - 30 - 14 |
| Drawn By: | T Doughty |

woodgrain doors