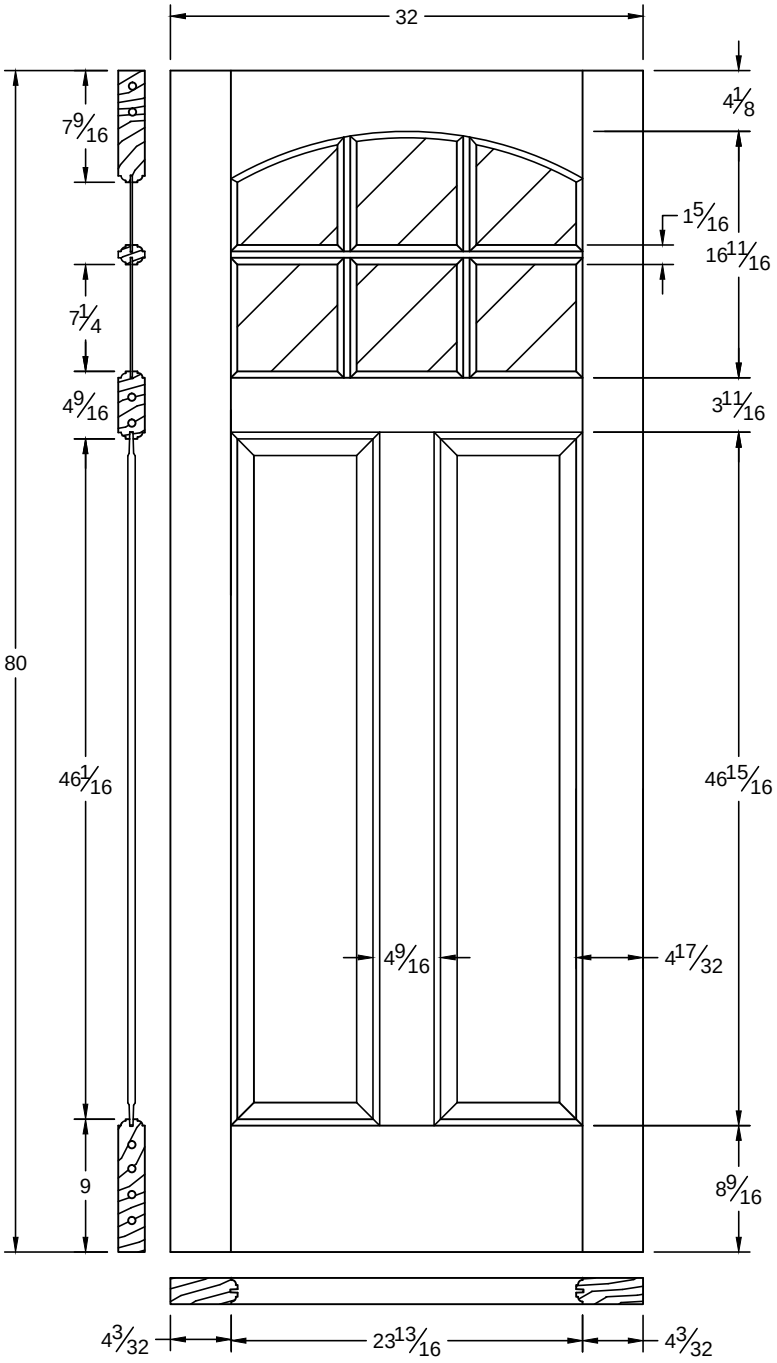

This drawing contains information which is the property of Woodgrain Millwork, Inc. This drawing is received on confinence and contents may not be disclosed without the prior written consent of Woodgrain Millwork, Inc.

832 / 6832

Draw #:	Ovolo 832_32_80
Date:	10 - 09 - 12
Drawn By:	T Doughty

woodgrain doors